BG9244-LE (10 LED display Optical power)

FTTB Out-door AGC Optical Receiver

PRODUCT DESCRIPTION

BG9244 is a type of out-door optical receiver . The product builds-in RF interstage gain adjustment and equalization. Users can choose one-way or two-way high output level with the insert. The product is used in FTTB, FTTN, FTTC and used as a Rx unit of CATV. It is a type of receiver with high flexibility, excellent performance and P/P ratio.

BG9244x-LE has this four types：

BG9244A-LE-NC：operating in 1260~1620nm wavelength，used in CATV system with analog TV channels.

BG9244D-LE-NC：operating in 1260~1620nm wavelength，used in CATV system with analog TV channels.

BG9244A-LE-WD：built-in CWDM,RFTV operation wavelength 1550nm,pass wavelength 1310/1490nm,(links EPON、GPON ONU).

BG9244D-LE-WD：Built-in CWDM,RFTV operation wavelength 1550nm,pass wavelength 1310/1490nm,(links EPON、GPON ONU).

PRODUCT FEATURES

▶Excellent AGC features: Pin：–7.0dBm~+2dBm, ΔVo : ≤±1. 0dB

▶Output level and slope are continuously adjustable in range of 0~15dB

▶Ten-segment input optical power indication

▶Four different configurations are applicable for different Networks:

BG9244A-LE-NC is applicable for analog TV

BG9244D-LE-NC is applicable for digital TV

BG9244A-LE-WD is applicable for FTTx PON

BG9244D-LE-WD is applicable for FTTx PON

▶Aluminum-casting housing, waterproof, for FTTB, FTTC

▶Excellent fuction and reliability

▶Excellent P/P ratio

MAIN APPLICATION

▶FTTB, FTTC

▶HFC

FUNCTIONAL BLOCK DIAGRAM

BG9244x-LE-NC

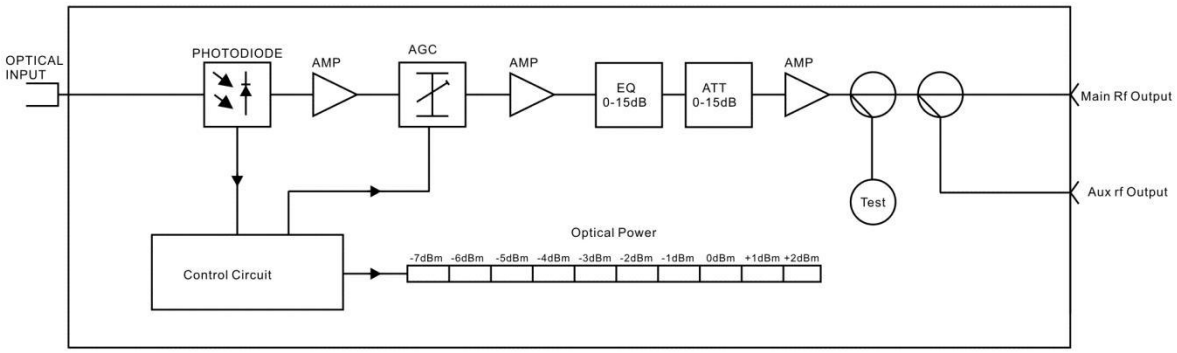

BG9244x-LE-WD

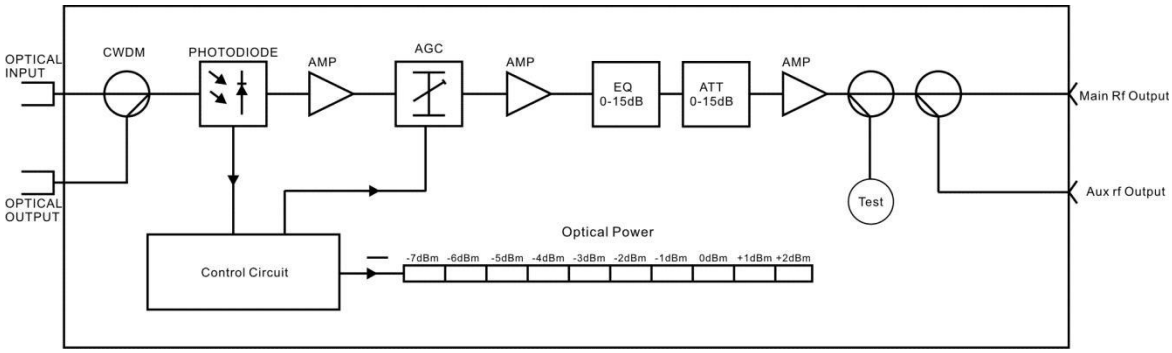

TECHNICAL INDEX

Performance			Index	Supplement
Optical feature	CATV Operating wavelength	(nm)	1260~1620	BG9244x-LE-NC
			1540~1560	BG9244x-LE-WD
	Input wavelength	(nm)	1310,1490/1550	
	Pass wavelength	(nm)	1310,1490	
	Channel Isolation	(dB)	≥40	
	Responsivity	(A/W)	≥0.85	1310nm
			≥0.9	1550nm
	Optical AGC control	(dBm)	-7~+2	Vo: 104 dBμV ±1.0
	Receiving power	(dB)	-10~+2	Analog TV
			-17~+2	Digital TV
	Optical return loss	(dB)	≥50	
	Optical fiber connector		LC/APC	Optional SC/APC, FC/APC
RF feature	Work bandwidth	(MHz)	45~862	
	Flatness	(dB)	≤±1.0	
	Output level	(dBμV)	104 ±1.0	Pin:-7.0~+2.0dBm
	AGC feature	(dB)	≤±1.0	Pin:-7.0~+2.0dBm
	Output level adjust	(dB)	-15~0	
	Output slope adjust	(dB)	-15~0	
	Return loss	(dB)	≥14	47 ~ 862MHz
	Output impedance	(Ω)	75	
	RF port		F-Female	
Analog TV line feature	Test channel		59CH(PAL-D)	47~550MHz Analog
			Digital QAM	550-862MHz
	OMI	(%)	3.8	
	CNR1	(dB)	54.6	Pin=-2dBm
	CNR2	(dB)	48.6	Pin=-7dBm
	CTB	(dB)	≤-70	Pin=-2dBm
	CSO	(dB)	≤-65	Pin=-2dBm
	HUM	(dB)	≤-60	

Digital TV line feature	Test channel		<10 CH	Analog
			Digital QAM	47-862MHz
	MER	(dB)	≥35(注 1)	Pin:-7.0~2.0dBm
			≥30	Pin=-16.0dBm
	BER	(dB)	<1.0E-9	Pin :-20~+2.0dBm
	POST	(dB)	<1.0E-9	Pin :-16~+2.0dBm
General feature	Power supply	(V)	AC(130~265)V	AC(35~85)V
	Power Consume	(W)	≤15	
	Work temp	(℃)	-40~60	
	Storage temp	(℃)	-40 ~ 65	
	Relative humidity	(%)	5 ~ 95	
	Size(W)×(D)×(H)	(mm)	185×140×91	

Remark: 1. CATV test signal: MER: 35.1dB, BER: <1.0E-9

STRUCTURE DIAGRAM

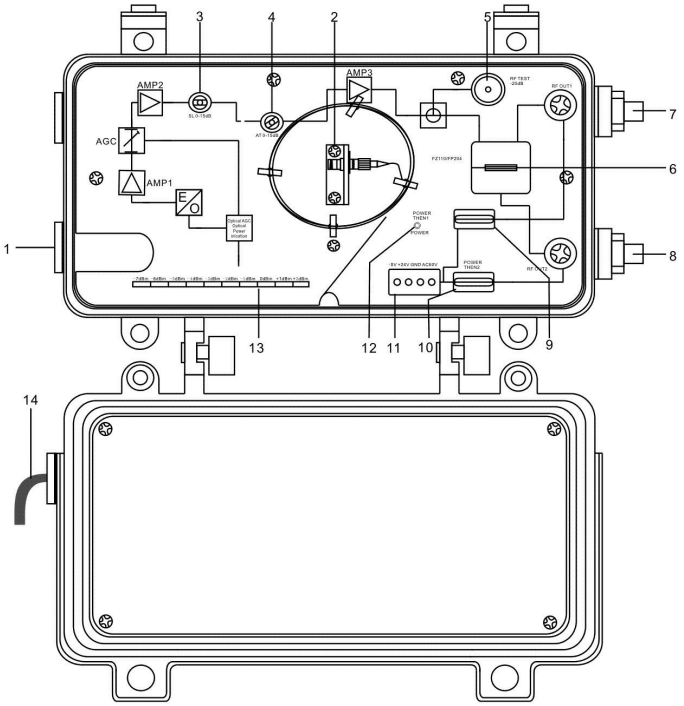

1、Fiber input
2、Fiber enamel
3、Adjustable RF equalizer
4、Adjustable RF attenuator
5、–20dBm RF testing port
6、Output branch or allotter
7、RF output 1
8、RF outpout 2
9、Power supply overcurrent film threading 1
10、Power supply overcurrent film threading 2
11、Power connector of main board
12、Power supply indicator light
13、Optical power indicator light
14、220V power supply

ANALOG TV TEST DATA (PIN=+2.0DBM~-10.0DBM)

Pin(dBm)	+2	-1	0	-1	-2	-3	-4	-5	-6	-7	-8	-9	-10
Vo(dBμV)	105.5	106.9	107.0	106.7	107.1	107.2	106.7	107.0	106.7	106.8	104.9	102.9	100.5
CNR(dB)	57.2	57.0	56.0	55.6	54.6	53.2	52.3	51.3	49.7	48.6	46.3	45.3	43.9
CTB(dB)	70.1	69.8	71.9	71.4	72.9	72.9	73.1	69.6	67.0	69.1	70.9	70.1	70.1
CSO(dB)	70.1	68.0	68.1	68.4	67.9	63.9	63.7	63.2	63.2	63.0	61.9	63.1	63.2

Remark: 1.Test signal: 47~550MHz 59CH (PAL-D), 550~862Mhz Digital QAM

2.Modulation: OMI=3.8%

3.Output level is 0dB attenuate

DIGITAL TV TEST DATA (PIN=+2.0DBM ~ -20.0DBM)

Pin (dBm)	Vo (dBm)	MER	BER		Pin (dBm)	Vo (dBm)	MER	BER	
			POST	PRE				POST	PRE
+2.0	102.4	35.2	<1.0E-9	<1.0E-9	-10.0	97.3	34.7	<1.0E-9	<1.0E-9
+1.0	103.9	35.1	<1.0E-9	<1.0E-9	-11.0	95.8	34.5	<1.0E-9	<1.0E-9
+0.0	103.5	35.1	<1.0E-9	<1.0E-9	-12.0	93.4	33.9	<1.0E-9	<1.0E-9
-1.0	102.8	35.2	<1.0E-9	<1.0E-9	-13.0	91.8	33.5	<1.0E-9	<1.0E-9
-2.0	103.6	35.0	<1.0E-9	<1.0E-9	-14.0	89.6	32.8	<1.0E-9	6.6E-7
-3.0	103.5	35.1	<1.0E-9	<1.0E-9	-15.0	87.8	31.8	<1.0E-9	3.7E-5
-4.0	103.2	35.1	<1.0E-9	<1.0E-9	-16.0	86.1	30.7	<1.0E-9	2.2E-4
-5.0	103.6	35.1	<1.0E-9	<1.0E-9	-17.0	83.2	28.8	5.5E-8	<1.0E-9
-6.0	103.8	35.1	<1.0E-9	<1.0E-9	-18.0	81.8	27.5	4.0E-7	<1.0E-9
-7.0	103.7	35.0	<1.0E-9	<1.0E-9	-19.0	79.5	25.8	1.7E-5	<1.0E-9
-8.0	102.2	34.9	<1.0E-9	<1.0E-9	-20.0	77.6	24.4	1.7E-4	<1.0E-9
-9.0	99.9	34.8	<1.0E-9	<1.0E-9					

Remark: 1. Test signal: MER: 35.4(dB)、BER: <1.0E-9

2.Channel : <10CH Analog TV 、Digital QAM

3.Output level is 0dB attenuate

PRODUCT SERIES

Model	Applicable Networks	CWDM	Display
BG9244A-LE-NC	Applies to analog TV and digital TV	Without CWDM	10 LED display
BG9244A-LE-WD		Built-in CWDM applies to FTTx PON	
BG9244D-LE-NC	Applies to CATV network with digital TV	Without CWDM	
BG9244D-LE-WD		Built-in CWDM applies to FTTx PON	

MODEL EXPLANATION

B G 9 2 44 □ – LE – □□ – □□ – □□

FTTB	ALC (AGC)	Work wavelength (Mhz)		Number of RF output		Output level		Applicable network		Parameter display		CWDM		Optical connector		Power supply	
		9	47~862	2	2ports	44	104(dBμV)	A	AnalogTV	LE	10 LED Display	NC	Without	LA	LP/APC	11	110VAC
		1	47~1000					D	DigitalTV			WD	Build-in CWDM	SA	SC/APC	22	220VAC
		2	47~1200											FA	FC/APC	60	60VAC